Not all thin-section bearings are created equal

KAYDON new capacity calculations

Robert Roos,
Scott Hansen

A white paper from KAYDON® Corporation Bearings Division

Table of Contents

Abstract ..... pg. 3

Introduction ..... pg. 4

Objective ..... pg. 7

Literature Review ..... pg. 8

Test Procedure
- Preparation ..... pg. 12
- Starting Test ..... pg. 13
- Stopping Test ..... pg. 13

New Kaydon Capacity Equations ..... pg. 16

Derivation of Constants:
- The Stress Constant ..... pg. 18
- The Ball Load Distribution Factor ..... pg. 19
- The Rows Exponent ..... pg. 19
- The Stress Factor (λ) ..... pg. 19

Four Point Contact Bearing Test Results ..... pg. 20

Conclusions ..... pg. 20

References ..... pg. 21

Abstract: *ABMA standard 9 and ISO 281 give equations for calculating the "Basic Dynamic Radial Load Rating" for ball bearings. These equations are based on a number of assumptions. Many of these assumptions are not valid for "Thin-Section" bearings. (Thin-Section bearings are described in ABMA standard 26.2). Nevertheless, many "Thin-Section" bearing catalogs report load ratings based on these equations.*

Kaydon has developed a new method for calculating the Dynamic Radial Load Rating for "Thin-Section" ball bearings. The new method uses the contact stress and the number of stress cycles per revolution to calculate the capacity. The new numbers are based on five years of actual test results. These equations can also be used to calculate the "Dynamic Radial Load Rating" for Four-Point contact ball bearings, which are not covered in standard 9 or ISO 281.

INTRODUCTION

The year was 1944 and the problem that needed to be solved required a new bearing to be developed. The US Government contacted Kaydon Engineering Corporation to engineer and build a light-weight, thin-section ball bearing for a ball gun turret to be used on an aircraft. This bearing became the inspiration for a catalog line of thin-section ball bearings known today as REALI-SLIM®.

In many applications, shafts supported by bearings are lightly loaded. Shaft position with respect to the housing or other components is critical. These designs do not need big, heavy bearings and can be supported adequately by thinner bearing races manufactured to close tolerances. Kaydon had identified a need for a bearing that was capable of saving space in designs and reducing overall weight. Thinner bearing races and cross sections allowed designers to also reduce the size and mass of the shafts and housings for even greater space and weight savings.

When is a bearing thin-section? Rolling element bearing dimensions have been standardized by the ABMA so that for a given bore diameter, bearings are manufactured with different outside diameters. For a given outside diameter bearings are made in different widths. Therefore, each bearing belongs to a dimension series that can be designated by diameter and width.

For a conventional series of ball bearings, radial cross section and ball diameter typically increase with bore diameter. Therefore, an increase in bearing weight is significant as bore diameter increases. The graph in Figure 1 compares conventional bearings with thin-section bearings illustrating this change in radial cross section with bore diameter.

Bearing weight can be reduced with thin-section bearings because for a given series of bearings, radial cross section and ball size remain constant. Generally, a bearing is considered to have a thin-section when:

- Radial cross section is less than one fourth the bore diameter.
- Radial cross section is less than twice the rolling element diameter.

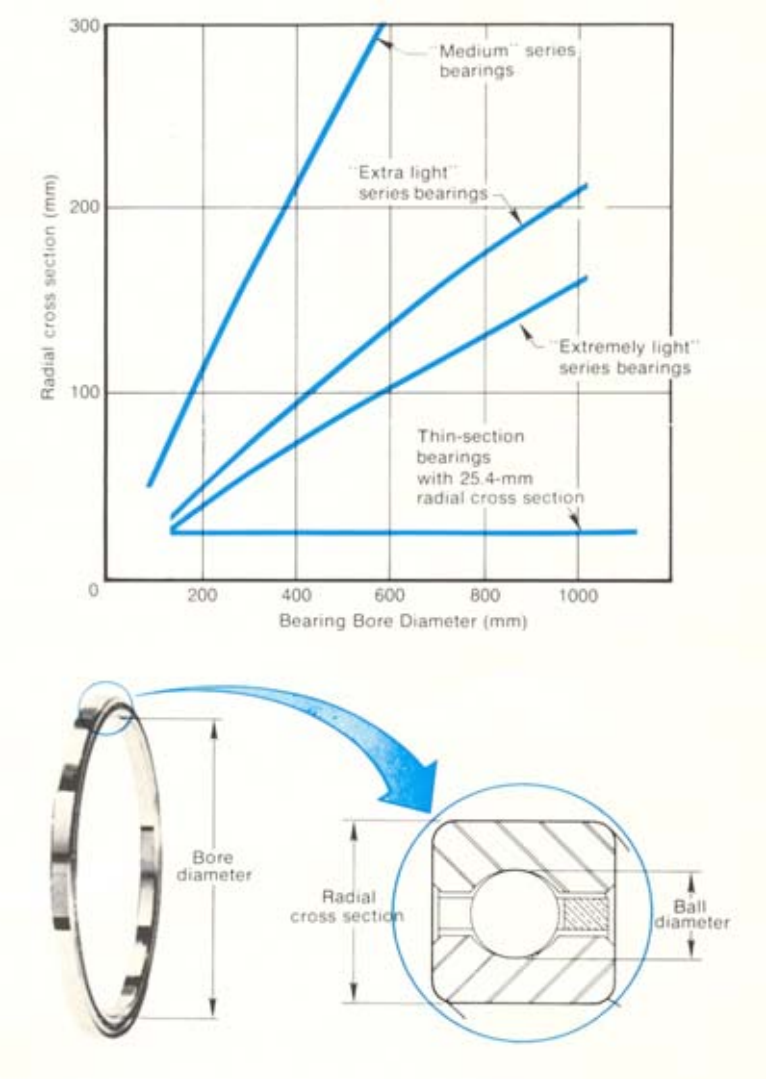

Figure 1

Benchmarking and Fatigue Life Testing

As the world's inventor and largest producer of thin-section ball bearings, Kaydon Bearings has devised methods for testing the fatigue life of REALI-SLIM® bearings. Daily testing of production product has continued for almost 40 years. The testing method is addressed in the section of this paper titled "PROCEDURE FOR TESTING FATIGUE LIFE OF REALI-SLIM® BALL BEARINGS". Along with testing of Kaydon produced REALI-SLIM® bearings we have also benchmarked most major known producers of thin-section ball bearings by subjecting their catalog equivalent bearings purchased through distribution to the same testing procedure.

TABLE A

TEST REPORT	BASE PART NUMBER	MANUFACTURER	B10 LIFE (hours)	EQUIVALENT CAPACITY (lbs)	CATALOG CAPACITY (lbs)	CATALOG CAPACITY COMPARISON	ACTUAL B10 FATIGUE PERFORMANCE
RP545	KC040CP0	Kaydon	76.0	1,059	880	+20%	+73%
RP487	KC040CP0	Kaydon	71.2	1,036	880	+18%	+64%
RP582	KC040CP0	Competitor (A)	23.2	713	1290	-45%	-83%
RP487	KC040CP0	Competitor (B)	12.5	580	884	-34%	-72%
RP534	NC040CP0	Kaydon	59.9	978	880	+11%	+36%
RP529	NC040CP0	Kaydon	120.4	1234	880	+40%	+174%
RP584	NC040CP0	Competitor (C)	19.1	668	1290	-48%	-87%

Kaydon REALI-SLIM® ball bearings outperform all thin-section ball bearings life tested to date (see TABLE A). Armed with this information, we set out to prove or disprove the ABMA / ISO calculations for life. Our findings are listed in the following report in the section titled “NEW KAYDON THIN-SECTION BALL BEARING CAPACITY CALCULATIONS”.

It is also important when comparing “catalog” bearings that appear to have the same or similar part number that all thin-section bearing are not created equal. There can be major differences in things that cannot easily be seen that can cause devastating reductions in bearing life and performance. Here is a short list of those differences:

- Ball grade
- Race and ball material and microstructure
- Hardness of balls and races
- Ball and ball path surface finish
- Method of manufacture grinding and hone of ball track (some thin-section bearing manufacturers only hard turn ball paths
- Curvature, race curvature
- Runouts: radial, axial
- Cleaning process
- Residual magnetism
- Cold temperature stabilization of races and balls
- Retained austenite

OBJECTIVE

The purpose of this study is to develop a new set of equations for calculating the dynamic capacity of REALI-SLIM® bearings. The new equations must be supported by both theory and actual test results.

LITERATURE REVIEW

Many thin-section ball bearing competitors calculate capacity using the methods found in ABMA standard 9, or in ISO-281. These standards define the term "Basic Dynamic Radial Load Rating" which is synonymous with Kaydon definition of "Dynamic Capacity". The Basic Dynamic Radial Load Rating (C_r) is defined as:

> "*That constant radial load which a bearing could theoretically endure for a basic rating life of one million revolutions.*"

These standards also define the L_{10} bearing fatigue life as:

> "*The basic rating life in millions of revolutions for 90% reliability*"

The L_{10} life is then calculated from the Load Rating (C_r) using equation 1. Please note that the "Basic Dynamic Radial Load Rating", as defined in these two standards, is not the maximum operating load for the bearing. It is simply a constant used in the life equation. It is often greater than the "Static" radial load rating (C_{or}). Loading the bearing beyond the "Static" rating will cause permanent deformation or "Brinelling". Both standards state:

> "*The life formula gives satisfactory results for a broad range of bearing loads. However . . . The user should consult the bearing manufacturer to establish the applicability of the life formula in cases where (the applied load) P_r exceeds (the static capacity) C_{or} or (1/2 the dynamic rating) 0.5 C_r, whichever is smaller.*"

Eg. 1 $$L_{10} = \left(\frac{C_r}{P_r}\right)^3$$ million revolutions ..... *ISO 281 par 5.3.1*

These two standards give the following equations for calculating the "Basic Dynamic Load Rating" (C_r):

$$C_r = b_m f_c (i\cos\alpha)^{0.7} Z^{2/3} D_b^{1.8}$$ for ball size (Db) ≤ 1 inch.

Eg. 2 *ISO 281 par 5.1*

$$C_r = 3.647 b_m f_c (i\cos\alpha)^{0.7} Z^{2/3} D_b^{1.8}$$ for ball size (Db) >1 inch

where:

- L_{10} = The basic life rating in millions revolutions for 90% reliability
- C_r = Basic Dynamic Radial Load Rating
- b_m = Material factor for contemporary steels (b_m = 1.3)
- f_c = Geometry factor from tables
- i = Number of rows
- a = Contact angle
- Z = Number of balls per row
- D_b = Ball Diameter
- P_r = Applied radial load.

Both standards provide tables for the geometry factor (f_c). The material factor (b_m) was added to ISO-281 in 1990. It equals 1.3 for radial and angular contact ball bearings made of contemporary steels. The 1990 version of ABMA standard 9 does not include this factor. However, the tables for factor f_c are 1.3 times higher than the ISO-281 tables. Therefore, the two standards calculate exactly the same capacity.

The factor f_c can also be calculated using the equation below:

Eg. 3 $$f_c = 4.1\lambda\left\{1+\left[1.04\left(\frac{1-\gamma}{1+\gamma}\right)^{1.72}\left(\frac{r_i}{r_o}\cdot\frac{2r_o-D_b}{2r_i-D_b}\right)^{0.41}\right]^{10/3}\right\}^{-0.3}\cdot\left(\frac{\gamma^{0.3}(1-\lambda)^{1.39}}{(1+\gamma)^{1/3}}\right)\left(\frac{2r_i}{2r_i-D_b}\right)^{0.41}$$

where: $\gamma = \dfrac{D_b Cos\alpha}{D_p}$ *Palmgren Table 3.2*

The units in this equation are kg and mm. For radial and angular contact ball bearings λ=0.95. For 4-point contact bearings λ=0.90. If we let f_i and f_o equal the inner and outer curvature ratio (r_x/D_b) and convert the units to N and mm this equation can be rewritten as:

Eg. 4 $$f_c = 38.20\left\{1+\left[1.04\left(\frac{1-\gamma}{1+\gamma}\right)^{1.72}\left(\frac{f_i}{f_o}\cdot\frac{2f_o-1}{2f_i-1}\right)^{0.41}\right]^{10/3}\right\}^{-0.3}\cdot\left(\frac{\gamma^{0.3}(1-\lambda)^{1.39}}{(1+\gamma)^{1/3}}\right)\left(\frac{2f_i}{2f_i-1}\right)^{0.41}$$

Ref. Harris eq. 18.106

The f_c values used in the ABMA std.9 and ISO-281 tables are based on a number of assumptions. These include the following:

1) Inner ring raceway cross sectional radius ≤ 0.52 D_b. (Curvature ratio ≤ 52%)
2) Outer ring raceway cross sectional radius ≤ 0.53 D_b. (Curvature ratio ≤ 53%)
   (The f_c tables in these standards were actually calculated using 52%)
3) 52100 Steel per ASTM A-295.
4) Adequate lubrication
   a) Free of contamination.
   b) Film thickness > the composite surface roughness.
5) Inner and outer races are rigidly supported and properly aligned.
6) "Nominal" internal clearance after mounting.
   ("Nominal" in this context means zero)
7) Radial ball bearings are made to ABEC 1 or better tolerances per ANSI/ABMA Standard 20. (*Thin Section* Bearings are made per ANSI.ABMA std. 26.2)
8) No truncation of the contact ellipse.

Kaydon does not use these equations to calculate Dynamic Capacity because most of these assumptions are not valid for "Thin Section" bearings. They were never intended for "Thin Section" bearings. Most importantly, the life calculated using these equations is not supported by Kaydon testing. Nevertheless, many Kaydon competitors use these equations anyway. (See table 1.)

Part No.	KAA10CL0	KA020CP0	KC040CP0	KF080CP0	KA120CP0	KG120CP0	KG400CP0
Kaydon Catalog	150	320	880	4100	980	8510	18,310
ISO/ABMA							
1990 f_c Tables:	558	1012	2321	8081	1904	14,133	21,630
1978 f_c Tables:	430	778	1785	6216	1465	10,872	16,638
Calculated f_c:							
1990:	379	701	1656	6363	1319	11,766	18,006
1978:	291	539	1274	4895	1015	9,050	13,851
INA[(1)]	558	1012	2316	8094		14,164	21,582
NSK[(1)]	558	1012	2316	8094		14,164	
RBC[(2)]	300	560	1290	5140	1060	10,690	16,230
SKF[(1)]	555	1009	2338	8049	1915	14,029	21,493

[(1)] INA, NSK and SKF all use the ABMA/ISO ratings taking f_c directly from the tables without adjusting for the curvature ratio or diametral clearance.
[(2)] RBC numbers appear to adjust for curvature, but not clearance.

Table 1 – Comparative Capacities

According to the old Kaydon capacity equations, the dynamic capacity of a KC040CP0 is 884 lbs. Under a radial load of 525 lbs, the predicted L_{10} life at 1780 RPM is 44.7 hrs. If the capacity is calculated using the 1978 ABMA/ISO equations, with f_c calculated using equation 4, rather then the using the tables, the capacity should be 1274 lbs. This gives a life of 133.8 hours. The actual average L_{10} life for these bearings over the last 5 years has been 80.2 hours. The actual life is almost double the life predicted by the old Kaydon equations, but "*apparently*" less than predicted by the ABMA/ISO equations.

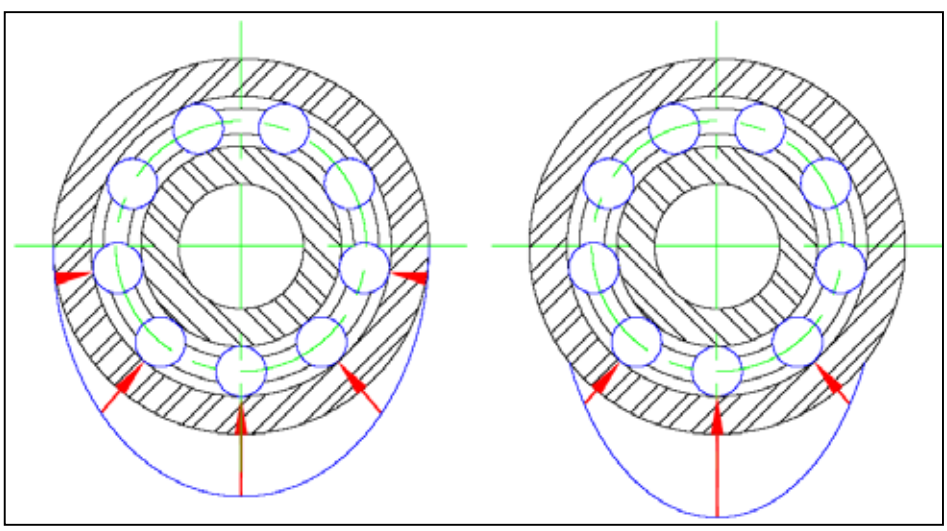

Figure 1 – Ball load Distribution

However, we know that life under a radial load decreases as the clearance increases. This is because fewer balls carry the radial load. (See figure 1) The theoretical L_{10} life was calculated for the KC040CP0 bearing under a 525 lb. load at 1780 RPM was plotted for various amounts of diametrical clearance. The life calculations use the ABMA/ISO capacity, (adjusted for curvature) in the life prediction. As shown in figure 2, the actual measured L_{10} life falls very close to the predicted values when clearance is considered.

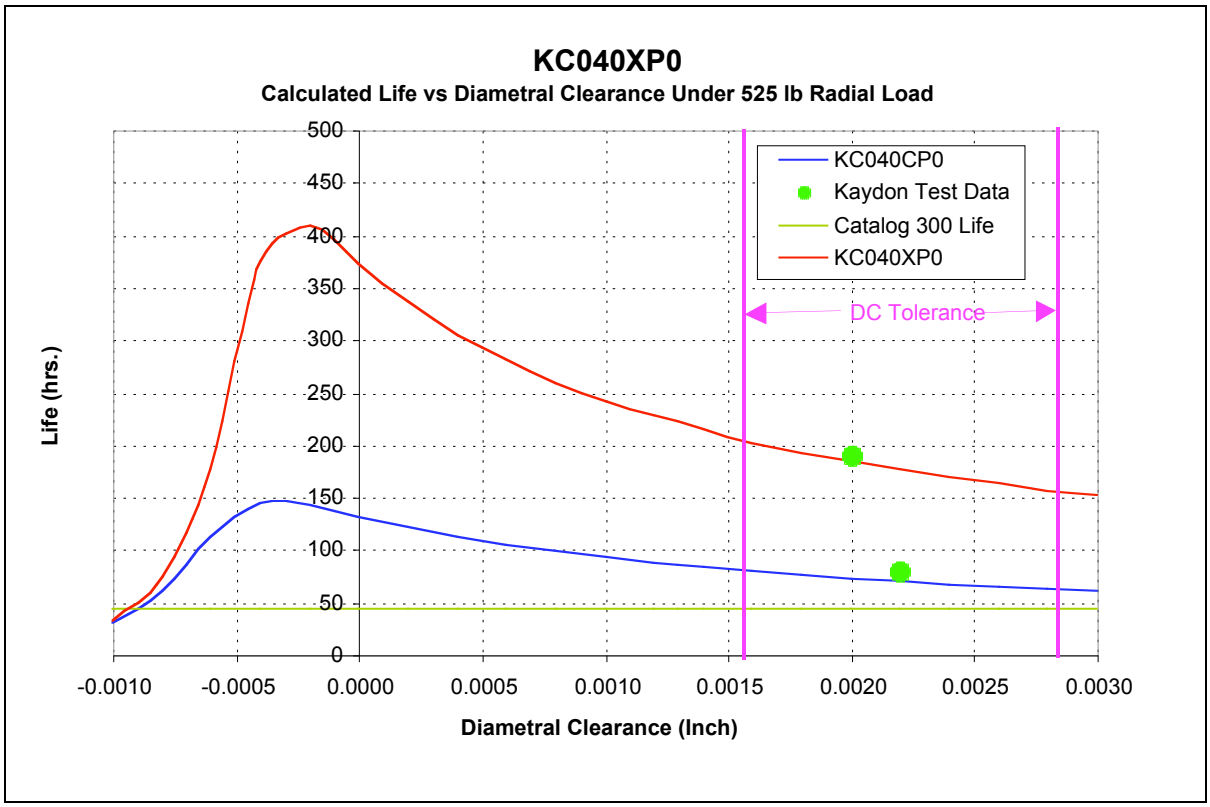

Figure 2 – Life vs. Diametral Clearance

In summary, Kaydon life testing does support the use of the ABMA/ISO (1978) capacity values, when curvature and clearance are considered. It does not support the modern materials factor (b_m) that was added in 1990. However, it is important that the assumptions behind these equations are understood.

The purpose of a published capacity is to allow the customer to use a quick $(C_r/P_r)^3$ equation to estimate life. The ABMA/ISO equations are not adequate for this purpose because they don't consider the curvature or clearance in the "Basic Dynamic Load Rating." Therefore, alternate methods must be used to calculate the published ratings for these bearings.

PROCEDURE FOR TESTING FATIGUE LIFE OF REALI-SLIM® BALL BEARINGS

PREPARATION

Test Parameters

The test parameters (i.e. load and speed) must first be calculated. These are selected to cause the bearings to fail by fatigue in a reasonable time period (typically less than 100 hours), while not subjecting the bearing to excessive loads. Testing speed is 1,780 rpm.

The desired radial load to be applied is found from the formula:

$$L_h = (16{,}667/S) \times (C / P)^3$$

or

$$P = C / [(S \times L_h / 16{,}667)^{1/3}]$$

Where L_h is the L_{10} life in hours under the test conditions
C is the Dynamic Load Rating for the bearing (from a catalog or calculation)
P is the Applied Radial Load
S is the Speed of the bearing under test, in RPM.

Applied test loads are normally selected to be approx 60% or less of the Dynamic Radial Load Rating.

Bearings to be tested should be randomly selected from the identified lot. At least 20 pieces should be used for each test. Each bearing should be identified with a unique reference number.

Bearings must be cleaned as assemblies prior to test, by mechanical agitation in mineral spirits for at least five (5) minutes.

Each bearing is mounted in suitable housings, making witness marks to indicate orientation in housings, and then mounted on a driven spindle with the axis horizontal. (See Figure 1).

A steel load strap is then attached to outer race, then connected to an air cylinder arranged to apply radial load to the bearing. The centerline of the air cylinder, the steel strap, and the lower tooling should all be in the same plane as the bearing centerline.

The force exerted by the load cylinder is measured by a portable load cell and digital indicator. The air pressure to the load cylinder is adjusted to produce the desired radial load on the bearing. **NOTE**: In calculating the total radial load on the bearing, the weight of the tooling must also be considered.

An accelerometer is mounted on top of the stationary housing with radial orientation, and is connected to the automatic monitoring equipment.

The circulating oil system is checked for adequate oil level, and to ensure that filter replacement is not overdue.

STARTING TEST

Circulating oil to lubricate the test bearing should be connected and turned on. The cooling water to the oil heat exchangers must also be turned on. Air to the load cylinder should be left "Off."

The drive motor is "jogged" to ensure that no components are loose and that there is no unwanted interference between the rotating and stationary parts. The motor is then turned on, and the reading (in hours and tenths) of the elapsed time meter is noted. All test notes are recorded on the Test Data Collection Sheet.

Oil flow to the bearing is adjusted to be as high as possible without causing excessive foaming or leakage from bearing housing. Oil flowing to each bearing should not exceed a temperature of 130 °F. Air to the load cylinder should now be turned "On."

The baseline radial vibration is measured. The auto shut-off system should then be set for this baseline vibration level, so that automatic shut-down occurs when vibration increases to 150% of baseline level.

STOPPING TEST

When bearing failure is suspected, either due to audible noise or auto shut-off, the bearing rotation is stopped, and the bearing is disassembled and inspected.

If no visible signs of spalling or other failure are found on the balls/rollers or race paths, the bearing is reassembled and remounted in the test housings, noting the orientation of witness marks. The testing is then resumed (with the automatic shut-down system, baseline vibration level reset if necessary).

If spalling is found, the hour meter reading is noted and the elapsed time is calculated. Also, the location and degree of spalling is noted, and then the bearing components are bagged, identified and saved.

After all bearings in the test have been run to failure, the elapsed times are entered into the Kaydon Weibull analysis software program. This program establishes the best-fit Weibull line for the data, calculates the slope and scale parameters, and determines the L_{10} fatigue life for the sample group.

The L_{10} value obtained from the Weibull program is then compared to the theoretical L_{10} fatigue life at the tested load and speed. If the observed L_{10} value does not meet or exceed the theoretical L_{10} value, an investigation should be conducted into possible root causes.

The Weibull slope parameter gives an indication of the degree of scatter of test results. For through-hardened AISI 52100 bearing steel races, a Weibull slope value in the range 1.0 – 1.5 is to be expected, with a lower value indicating a greater degree of fatigue life dispersion, and a higher value indicating less scatter.

At least one failed bearing race should be sectioned and mounted, through a failed area (spall). At a minimum the following metallurgical properties should be evaluated and recorded:

- hardness
- grain size
- steel cleanliness
- carbide networking

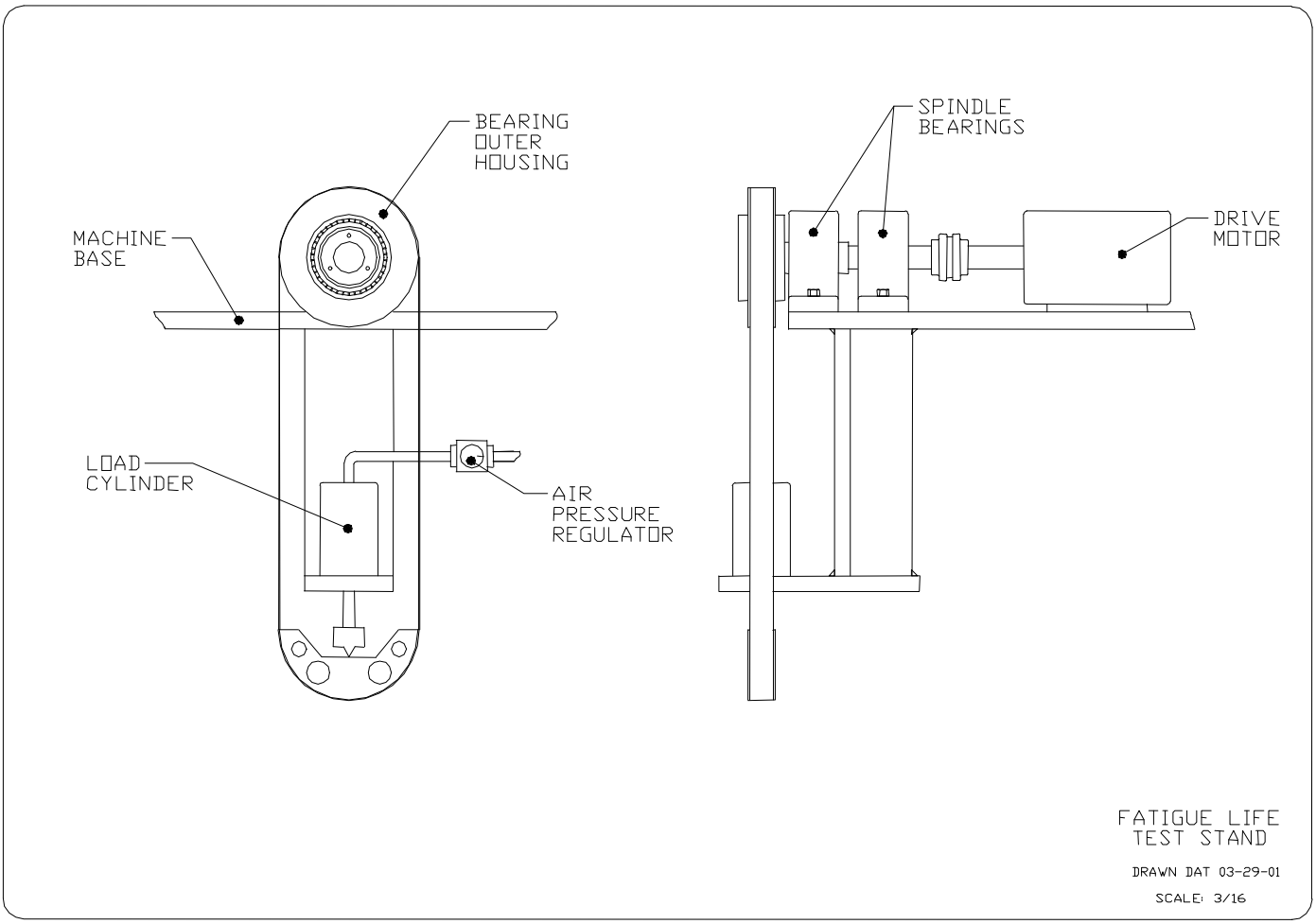
BEARING
OUTER
HOUSING
MACHINE
BASE
LOAD
CYLINDER
AIR
PRESSURE
REGULATOR
SPINDLE
BEARINGS
DRIVE
MOTOR
FATIGUE LIFE
TEST STAND
DRAWN DAT 03-29-01
SCALE: 3/16

FIGURE 1

RESULTS: NEW KAYDON CAPACITY EQUATIONS

A) Dynamic Radial Capacity (C_r)

The new Kaydon capacity calculations are based on the contact stress and the number of stress cycles at the highest loaded point in the stationary race. ABMA and ISO calculations assume that the inner race is rotating and the outer race is stationary. Therefore, the highest loaded point on the outer race is always in the same spot. The inner race may actually have a higher contact stress, but the load is distributed over the entire circumference. The dynamic capacity is calculated from the basic life equation, as shown in equations 1 and 5 below.

Eg. 1 $$L_{10} = \left(\frac{C_r}{P}\right)^3 10^6 \text{ (revolutions.)}$$

Eg. 5 $$C_r = P_r\left(\frac{L_{10}}{10^6}\right)^{\frac{1}{3}} = P_r\left(\frac{10^8/f}{10^6}\right)^{\frac{1}{3}} = P_r\left(\frac{100}{f}\right)^{\frac{1}{3}} = \frac{Q_{maz} Zi^{.7} Cos\alpha}{S}\left(\frac{100}{f}\right)^{\frac{1}{3}}\lambda \text{ (lbs.)}$$

where:

C_r The basic dynamic load rating (Dynamic Capacity)
P_r The radial load for a life of 10^8 stress cycles.
L_{10} The number of revolutions for 10^8 stress cycles.
f The number of stress cycles per revolution.
Q_{max} The normal ball load on the highest loaded ball for 10^8 stress cycles.
Z The number of balls per row.
i The number of rows of contact.
α The contact angle.
S The ball load distribution factor.
λ The stress factor: λ=1 for Angular (A) and Radial (C) contact bearings and λ=(.9/.95) for Four Point (X) contact bearings.

The factor Q_{max} is the normal ball load that gives a mean contact stress of 262,500 psi, in the outer race. This is the stress value associated with 10^8 stress cycles. This stress value was determined experimentally in Kaydon laboratory testing. The L_{10} life in revolutions is then calculated by dividing the number of stress cycles (10^8) by the number of stress cycles per revolution (*f*) which is calculated using equation 3, below.

<u>Stress Cycles Per Revolution</u>:

Eg. 6 $$f = \frac{Z}{2}\left(1 - \frac{D_b}{D_P}\cos\alpha\right)$$ .....*ref. Harris eq. 25.14*

The relationship between max ball load (Q_{max}) and applied radial load (P_r) is calculated using the "Stribeck" equation, shown in equation 4 below. The constant "S" is the load distribution factor. For bearings with zero diametral clearance S equals 4.37. For bearings with "nominal" clearance, an approximate value of 5 is often used for S.

Eg. 7 $$P_r = \frac{Q_{\max} Z \cos\alpha}{S}$$ .....*ref. Harris eqs. 6.23/6.24*

However, in reality, S varies with both diametral clearance and applied loads. For "REALI-SLIM® bearings, the diametral clearance increases with the nominal diameter. Therefore the factor S also increases with diameter. The value of S, used in the new Kaydon capacity equations varies with the pitch diameter. It assumes that a nominal amount of diametral clearance remains in the bearing after installation. It is calculated using the equation 5, below.

<u>Equation for ball distribution factor</u>:

Eg. 8 $S = .027D_p + 5.260$

It takes 4 steps to calculate the new dynamic radial capacity. These are detailed below.

<u>Step 1</u>: The first step in calculating the capacity is to calculate the normal ball load (Q_{max}) that gives an outer race mean contact stress of 262,500 psi. This is calculated using the standard stress equations. This gives the ball load capacity for 10^8 stress cycles.

<u>Step 2</u>: The next step is to calculate the ball distribution factor (S) from equation 8.

<u>Step 3</u>: The number of stress cycles per revolution is then calculated using equation 6.

<u>Step 4</u>: Once the max normal ball load, the distribution factor, and the number of stress cycles per revolution are known, the radial capacity can be calculated using equation 5.

DERIVATION OF CONSTANTS

A) The Stress Constant:

The 262,500 PSI contact stress constant used in these equations comes from Kaydon laboratory life testing of KC040CP0 bearings. The L_{10} life in hours for a ball bearing is given by equation 12 below.

Eg. 12 $$L_{10} = \left(\frac{C_r}{P}\right)^3 \bullet \left(\frac{16{,}667}{N}\right) \text{hours}$$

Under a radial load of 525 lbs, at a speed of 1780 RPM, the L_{10} life of a KC040CP0 bearing over the last 5 years has averaged 80.2 hours. By solving the life equation (*Eg. 12*) for C_r, the new dynamic rating for the KC040CP0 becomes 1073 lbs.

Eg. 13 $$C_r = P\left(\frac{L_{10}N}{16667}\right)^{1/3} = 525\left(\frac{80 \cdot 1780}{16667}\right)^{1/3} = 1073 \text{ lbs.}$$

Under a radial load of 1073 lbs, and an estimated installed clearance of .0016 inch, the maximum ball load is 164.84 lbs. Solving equation 7 for S gives a load distribution factor of 5.3769. (See attachment 1)

Ref. Eg. 7 $$S = \frac{Q_{\max} Z \cos\alpha}{P_r} = \frac{(164.84)(35)(1)}{1073} = 5.3769$$

The number of stress cycles per revolution is calculated using equation 6, and equals 16.75 for the KC040CP0, as shown below. This means that there are 16.75 million stress cycles per million revolutions.

Ref. Eg. 6 $$f = \frac{Z}{2}\left(1 - \frac{D_b}{D_P}\cos\alpha\right) = \frac{35}{2}\left(1 - \frac{.1875}{4.375}\right) = 16.75$$

We can then calculate the normal ball load for an L_{10} life of 100 million (10^8) stress cycles using equation 5. The normal ball load for a fatigue life of 10^8 stress cycles equals 90.87 lbs. as shown below.

Ref. Eg. 5 $$C_r = \frac{Q_{maz} Z Cos\alpha}{S}\left(\frac{100}{f}\right)^{\frac{1}{3}} = 1073 = \frac{Q_{\max} 35}{5.3769}\left(\frac{100}{16.75}\right)^{\frac{1}{3}} \text{ or } Q_{max} = 90.87 \text{ lbs.}$$

For a normal ball load of 90.87, the mean contact stress in a KC040CP0 outer race is 262,500 PSI.

B) The Ball Load Distribution Factor (S):

For the KC040CP0 bearing under an applied load of 1073 lbs, and an assumed clearance after installation of .0016 inch, the ball load distribution factor (S) was calculated to be 5.3769.

For the KG400CP0, an outer race stress of 262,500 PSI, corresponds to a normal ball load of 801.23 lbs. The stress cycles per revolution (*f*) for this bearing equal 60.75. As shown in equation 5, the capacity is a function of the load distribution factor, which is in turn a function of the diametral clearance and the applied load. Equation 5 was then solved by trial and error for the capacity (C_r) and the load distribution factor (S). For an assumed clearance of .0072 inch and a radial load of 18,307 lbs, S was calculated using Kaydon program to be 6.3562.

The stress distribution factor (S) varies with the installed clearance, which increases with the pitch diameter. The equation for S, was derived using the equation of a line.

Eg. 14 y = mx + b where: $m = \frac{S_1 - S_2}{D_{p1} - D_{p2}} = \frac{6.3562 - 5.3769}{41 - 4.375} = .02674$

b = y – mx = 5.3769 - (.02674) (4.375) = 5.2599

$S = .02674 D_p + 5.2599$

C) Rows of Contact Exponent ($i^{(.7)}$)

The number of rows of contact is raised to the 0.7 power because failure can occur on either row. This is a statistical factor that considers the possibility of either row failing. It gives the L_{10} life for the whole bearing, and is lower than the life for the individual rows. This factor is consistent with both the ISO/ABMA calculations as well as the old Kaydon method.

D) The Stress Factor (λ))

The tables in both ABMA standard 9 and ISO 281 show multiple columns for factor (f_c). The first column is titled “Single Row Radial Contact” and “Single and Double Row Angular Contact”. The second column is titled “Double Row Radial Contact”, and has a lower value for (f_c). The reason for this is described on page 81 and table 3.3 of Ball and Roller Bearing Engineering by A. Palmgren (1959). Palmgren shows a λ of .95 for single row radial bearings, and for single and double row angular contact bearings. He also shows a λ=.90 for double row radial bearings. It is described as a stress factor. This factor allows for uneven load sharing between the two rows of contact. Therefore, Kaydon has chosen a de-rating factor of (λ=.90/.95) for Four-Point Contact (X-Type) ball bearings. (The 0.95 factor for radial and angular contact bearings is already factored into the maximum allowable stress level, which was established by testing.)

FOUR POINT CONTACT BEARINGS

Using the new capacity calculation (Equation 5), the radial capacity of a KC040XP0 (4-Point) bearing is 1,417 lbs. If we plug this number into equation 9, the L_{10} life under a test load of 525 lbs, at 1780 RPM is 184 hours. In Kaydon testing, the L_{10} life of a standard KC040XP0 was actually 189.3 hours. Therefore, there is good correlation between the calculated and measured capacity.

Ref. Eg. 9 $$L_{10} = \left(\frac{C_r}{P}\right)^3 \bullet \left(\frac{16{,}667}{N}\right) = \left(\frac{1417}{525}\right)^3 \bullet \left(\frac{16{,}667}{1780}\right) = 184 \text{ (hrs.)}$$

CONCLUSIONS

The new Kaydon capacity equations are based on the maximum contact stress and the number of stress cycles per revolution. They consider the actual curvature of the races. They also consider the diametral clearance. The new capacities are supported by actual test data. The new radial capacity for radial (C-type) bearings ranges from 36% higher in the KAA10CL0 to no change in the KG400CP0. The radial capacity of four point contact (X-type) bearings increases from 31% to 77% depending on the bearing size. The new capacities are still lower than the ABMA/ISO numbers, but will give a more accurate estimate of actual bearing life when used in the $L_{10}=(C_r/P_r)^3$ equation.

These equations apply to Kaydon Catalog 300 bearings with standard clearance only. Preload and clearance have a significant influence on bearing life. The catalog capacity should be used for an initial bearing selection only. Life can then be calculated using other Kaydon programs. These programs use the ISO/ABMA capacity, but also take the curvature and/or clearance/preload into consideration.

References:

"Load Ratings and Fatigue Life for Ball Bearings", ANSI/AFBMA Std 9, (1978)

"Load Ratings and Fatigue Life for Ball Bearings", ANSI/AFBMA Std 9, (1990)

"Rolling Bearings – Dynamic Load Ratings and Rating Life" ISO 281, (1990)

T. Harris, **Rolling Bearing Analysis**, 3rd Ed., J Wiley & Sons USA (1991)

A. Palmgren, **Ball and Roller Bearing Engineering**, 3rd Ed., SKF Industries, Inc., Philadelphia, PA. (1959)