1.0 SCOPE

(R) 1.1 This specification outlines the acceptable packaging, shipping and material identification procedures for forgings, tubing and bar for all Kaydon Bearings Division locations.

2.0 REFERENCES

AMS 2806 Identification – Bars, Wire, Mechanical Tubing, and Extrusions.

AMS 2808 Identification – Forgings.

AMS 2251 – Bars

ASTM A29/A29M - Bars

ASTM 2241 – Bars

ASTM A484/A484M – Bars

3.0 ATTACHMENTS

(R) KBM 015-4 Drawing
Bar tolerances

4.0 EXCEPTIONS

4.1 Request for deviation or exemption from this specification must be made in writing and must incorporate specific proposal(s) for the alternate procedure(s). Items outside the scope of this specification shall be handled on a case by case basis. Special instructions shall be written comprising all factors covered herein.

5.0 FORGINGS

5.1 Packaging

5.1.1 Rings up to 85” O.D.

5.1.1.1 Rings must be palletized (wooden crates permissible upon special request).
(R) 5.1.1.2 Maximum pallet weight-6000# gross for Sumter, Plant #4 and 5000# for Plant 1.
5.1.1.3 Rings must be securely fastened to the pallet utilizing shrink wrap (preferred) and/or steel banding. The method used must prevent the load from shifting or separating from the pallet during transit.
5.1.1.4 Load only one part number and one heat per pallet unless there is a physical barrier separating part numbers and/or heats.

(R) 5.1.2 Rings over 85” O.D. (all weights) and rings over 2000# each.

5.1.2.1 Rings must be individually blocked. Bottom ring must be blocked on 4 X 4 ‘s, balance blocked on 1-1/2” X 1-1/2” approximately if stacked.
5.1.2.2 No palletizing or wrapping required.
5.1.2.3 See “shipping” for method of restraint.

5.2 Shipping

5.2.1 Rings under 85”

5.2.1.1 Machined Rings

5.2.1.1.1 Use closed top trailers (preferred) or tarped on flat bed trailer.
5.2.1.1.2 Skids must be arranged to allow unloading from the rear of the trailer.

5.2.1.2 As Rolled Rings

5.2.1.2.1 Used closed top trailers (preferred) or untarped on flat bed trailer.
5.2.1.2.2 Skids must be arranged to allow unloading form the rear of the trailer.

5.2.2 Rings over 85”

5.2.2.1 Use flat bed trailers only.
5.2.2.2 Rings must be chained, banded or strapped to prevent movement.
5.2.2.3 Rings must lay flat except when using an “A” frame.
5.2.2.4 Loads must be arranged to allow unloading form the side of the flat bed.
5.2.2.5 Chains, etc. used to secure the load must not deform or otherwise damage the rings.
5.2.2.6 The shipment of oversize loads (permits, etc.) are the responsibility of the vendor.

5.3 Identification

5.3.1 Rings over 24” O.D.

5.3.1.1 Each ring must be marked on the O.D. with the Kaydon 13 digit number and either the heat number or heat code (traceable and cross referenced to the

mill heat number).

5.3.2 Rings 12-24” O.D.

5.3.2.1 Rings on the top and bottom of each corner and in the middle of each face must be marked on the O.D. with the Kaydon 13 digit number and either the heat number or heat code (traceable and cross referenced to the mill heat number). (Refer to drawing A-KBM015-4).

5.3.3 Rings under 12” O.D.

5.3.3.1 Same as 5.3.2 except weatherproof tags may be used in lieu of painting or cold stamping on corners and center faces.

5.3.3.2 Identification shall be on the O.D. of each ring, either painted or cold stamped (painted only on aluminum rings).

(R) 5.3.3.3 One set of forging and original mill (steel) certifications must be sent with each shipment (refer to individual KBM specifications for specific requirements).

5.3.3.4 Each skid, ring over 85”, or ring over 2000# shall be tagged with the following information:

- Kaydon P.O. number
- Kaydon KBM number
- Weight and number of pieces
- Kaydon 13 digit number
- Vendor heat number
- Vendor identification

5.3.3.5 Tag will be metal (preferred), plastic or some other weatherproof material.

6.0 <u>TUBING</u>

6.1 Packaging

6.1.1 Maximum bundle circumference is 54”.

(R) 6.1.2 Maximum gross bundle weight is 1500#.

(R) 6.1.3 Tube length – 8-14 feet (12’ preferred).

(R) 6.1.4 All bundles securely banded with a minimum of 6 1” straps when the product arrives at Kaydon.

6.1.5 Load only one part number and one heat per bundle.

6.1.6 Coat tubes with light oil to prevent rust.

6.1.7 Maximum curvature of individual tube not to exceed 0.045 inch depth of arc in any three foot length.

6.2 Shipping

(R) 6.2.1 Use flat bed trailer.

6.2.2 Closed top vans by permission only.

6.2.3 Each bundle must be blocked with 3 X 3's or 4 X 4's.

6.2.4 Bundles shall be tarped when shipped via flat bed trailer and covered when shipped via open top van.

(R) 6.2.5 Plant 12 – Bundles must be arranged to allow unloading from the side of the flat bed trailer.

6.3 Identification

6.3.1 Minimum identification (each tube)

6.3.1.1 13 digits Kaydon part number
6.3.1.2 Kaydon material specification number
6.3.1.3 Heat number

6.3.2 Identification shall be cold stamped into end face of tubes over 1" O.D. or stamped on side or stenciled on O.D. at one end of tube. Tubes under 1" O.D. shall be cold stamped , stenciled, or tagged per method listed below.

(R) 6.3.3 One set of certifications must be sent with each shipment (refer to individual KBM material specific requirements).

6.3.4 If warehouse supplied, warehouse and original mill (steel) certifications must be supplied with each shipment.

6.3.5 Each bundle shall be tagged with the following information:

6.3.5.1 Kaydon P.O. number
6.3.5.2 Kaydon KBM number
6.3.5.3 Weigh and number of pieces
6.3.5.4 Kaydon 13 digit number
6.3.5.5 Vendor heat number
6.3.5.6 Vendor identification

6.3.6 Tag will be metal (preferred), plastic or some other weather-proof material.

6.4 Tolerancing

6.4.1 Straightness – see page 9

7.0 <u>BAR STOCK</u>

7.1 Packaging

7.1.1 Maximum gross bundle weight

(R) 7.1.1.1 Plant 1: 4000#
7.1.1.2 Sumter: 2000#

7.1.2 Maximum bundle circumference

(R) 7.1.2.1 Plant #1 & Sumter, Plant 4: No max.

7.1.3 Bar lengths

(R) 7.1.3.1 Plant 1: 10-14-ft. (12' preferred)
7.1.3.2 Sumter, Plant 4: 8-12 ft.

7.1.4 All bundles are to be securely banded.

7.1.5 Load only one part number and one heat per bundle.

7.1.6 Centerless ground bars under ¼" O.D. are to be boxed.

7.2 Shipping

7.2.1 Shipments over 5000#: use flat bed trailer or open top van.

7.2.2 Shipments under 5000#: prefer flat bed trailer or open top van. Closed top vans permissible.

7.2.3 Each bundle must be blocked with 3 X 3's or 4 X 4's.

7.2.4 Bundles shall be tarped if shipped via flat bed trailer.

7.2.5 Bundle must be arranged to allow unloading from the side of the flat bed trailer or by overhead hoist on open top vans.

7.3 Identification

7.3.1 Minimum identification (each bar):

7.3.1.1 13 digit Kaydon part number
7.3.1.2 Heat number

7.3.2 Identification shall be cold stamped into end of bars (1-1/2" and over) or continuously marked (stenciled) along length of each bar tagged. Bars under 1-1/2" shall be continuously marked or tagged per method listed below.

(R) 7.3.3 One set of certifications must be sent with each shipment (refer to individual KBM material specifications for specific requirements).

(R) 7.3.4 If warehouse supplied, one set of warehouse and original mill (steel) certifications must be sent with each shipment.

7.3.5 Each bundle shall be tagged with the following information:

7.3.5.1 Kaydon P.O. number
7.3.5.2 Kaydon KBM number
7.3.5.3 Weigh and number of pieces
7.3.5.4 Kaydon 13 digit number
7.3.5.5 Vendor heat number
7.3.5.6 Vendor identification

7.3.6 Tag will be metal (preferred), plastic or some other weatherproof material.

7.4 Tolerancing

7.4.1 O.D. and straightness
7.4.2 See pages 8 and 9.
7.4.3 These tolerances will apply unless otherwise noted on the bar drawing.

8.0 GENERAL COMMENTS

8.1 Receiving hours (all plants) 7:00 a.m. to 3:00 p.m.

8.2 Bill of loading must show our receiving hours.

(R) 8.3 Paperwork with shipment:

8.3.1 Certification (as specified in KBM material specifications, purchase orders, QCF 45-129 and drawings)
8.3.2 Packing list

8.4 The packing list will show:

8.4.1 Vendor
8.4.2 Kaydon P.O. number
8.4.3 13-digit Kaydon code number
8.4.4 Quantity (pieces and weights)
8.4.5 Heat number
8.4.6 Kaydon KBM number
8.4.7 Skid/bundle numbers

8.5 Shipments which do not comply with the requirements of this specification are subject to rejection and return at the Vendor's expense.

8.6 No invoice will be paid unless correct paperwork is received with the shipment.

8.7 Urgent shipments should be coordinated with the Kaydon Traffic Manager.

8.8 Exception to identifying all forgings with the 13-digit code number shall be made on an individual basis and shall be noted on the purchase order at the time parts are inspected at Receiving Inspection.

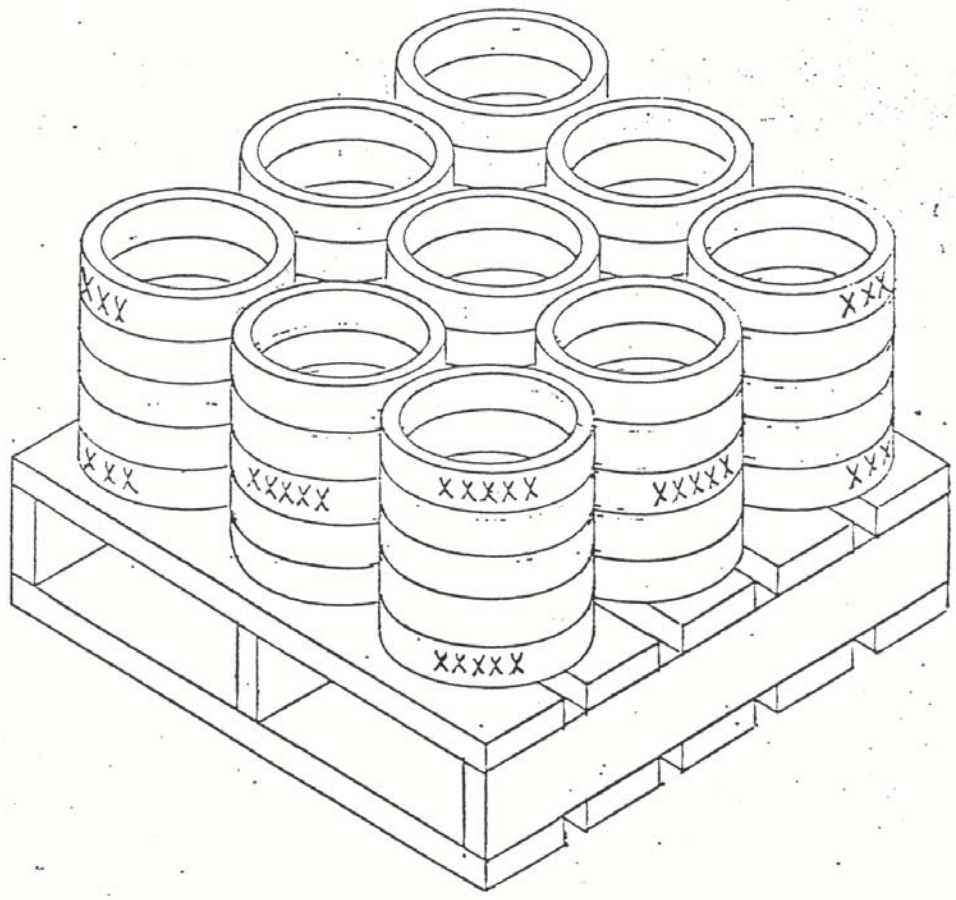

XXXXX = KAYDON 13 DIGIT NUMBER
AND HEAT #/CODE

KAYDON CORP

FORGING IDENTIFICATION
12-24" O.D.

DWG A-KBMϕ15-4

BAR STRAIGHTNESS TOLERANCES

ALLOY STEEL BARS
(GRADES 52100, M50M 434OM 9310M 8620)

Cold Finished

NOTE: All grades quenched and tempered or normalized and tempered to Brinell 302 max. before cold finishing: and all grades stress relieved or annealed after cold finishing. Straightness tolerances are not acceptable to bars having Brinell hardness exceeding 302.

Straightness tolerances, in. (Maximum deviation) from straightness in any 10-ft portion of the bar.

Size, in.	Length, ft.	Maximum of Carbon Range, 0.28% or Less	Maximum of Carbon Range Over 0.28% and All Grades Thermally Treated
Less than 5/8	Less than 15	1/8	3/16
Less than 5/8	15 and over	1/8	5/16
5/8 and over	Less than 15	1/16	1/8
5/8 and over	15 and over	1/8	3/16

The forging tolerances are based on the following method of measuring straightness:

Departure from straightness is measured by placing the bar on a level table so that the arc, or departure from straightness, is horizontal, and the depth of the arc is measured with a feeler gage and a straight-edge.

It should be recognized that straightness is a perishable quality and may be altered by mishandling. The Preservation of straightness in cold-finished bars requires the utmost care in subsequent handling. Specific Straightness tolerances are sometimes required for carbon and alloy steels in which case the purchaser should inform the manufacturer of the straightness tolerances and the methods to be used in checking the straightness.

HOT FINISHED

Shall be of such straightness that the maximum edgewise curvature (depth of arc) shall be not greater than 0.025 in. in any 5 ft. of length or 0.50 in. X length in feet for shorter lengths.

When so ordered, bars shall be of such straightness that the maximum edgewise curvature (depth of arc) shall be not greater than 0.125 in. in any 5 ft. of length or 0.025 in. X length in feet for shorter lengths.

STAINLESS STEEL BARS
(Grade 440C)

Measurement is taken on the concave side of the bar with a straightedge. Unless otherwise specified, Hot-finished or cold-finished bars for machining purposes are furnished machine straightened to the Following tolerances:

Cold Finished: 1/16 in. (1.5mm) in any 5 ft. (1.5m); but may not exceed
1/16 in. (1.5mm) X (length in ft/5) (m/1.50)

Hot Finished: 1/8 in. (3.00mm) in any 5 ft. (1.50m); but may not exceed 1/8 in.
(3.00mm X length if ft/5) (m/1.50)

STAINLESS STEEL BARS
(Grade 440C)

Measurement is taken on the concave side of the bar with a straightedge. Unless otherwise specified, hot-finished or cold-finished bars for machining purposes are furnished machine straightened to the following tolerances:

Cold Finished: 1/16 in. (1.5mm) in any 5 ft. (1.5m); but may not exceed
1/16 in. (1.5mm) X (length in ft/5) (m/1.50)

Hot Finished: 1/8 in. (3.00mm) in any 5 ft. (1.50m); but may not exceed 1/8 in.
(3.00mm X length if ft/5) (m/1.50)

Straightness tolerances have not been established for sizes less than 1/2 in. (6.50 m)

TUBING STRAIGHTNESS TOLERANCES

Maximum curvature not to exceed 0.045 inch depth of arc in any three (3) foot length.